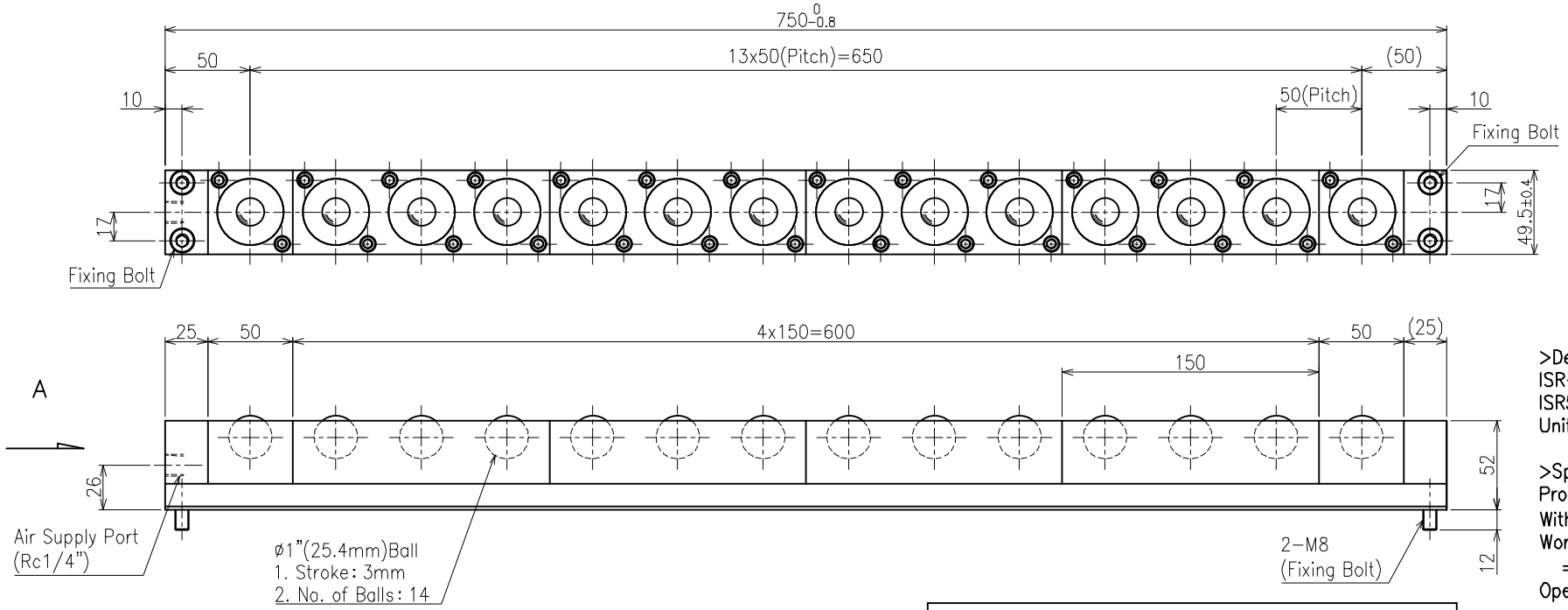


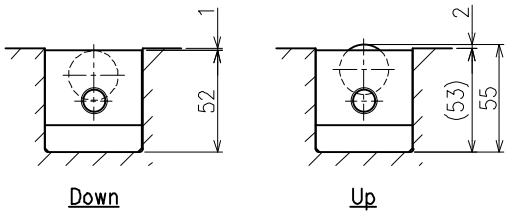


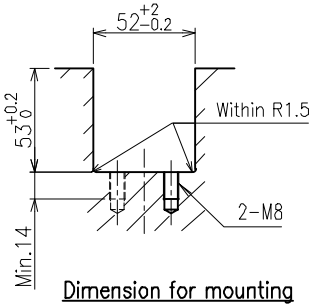


| Load capacity | | | |
|---|---|---|---|
| No. of balls | 14 | | |
| Supplied air pressure | 0.4MPa | 0.5MPa | 0.6MPa |
| | {4.08kgf/cm²} | {5.10kgf/cm²} | {6.12kgf/cm²} |
| Load capacity on each ball | 0.46kN | 0.60kN | 0.73kN |
| | {47kgf} | {61kgf} | {75kgf} |
| Load capacity on each unit | 6.45kN | 8.37kN | 10.30kN |
| | {658kgf} | {854kgf} | {1050kgf} |

>Description
ISR-50S Type Air Ball Lifter
ISR50S-750-A Type
Unit = mm

>Specification
Product weight = 6.3kg
Withstand pressure = 0.9MPa (9.18kgf/cm²)
Working pressure range
= 0.05~0.6MPa (0.51~6.12kgf/cm²)
Operating tempreture range
= -5~80°C (without freezig air line)
Using fluid = Air and inert gas (no filling up)

>Material
Ball = SUJ2
Plate = SUJ2
Cap = POM
O-ring = NBR
Grease = Normal Grease
Body = A6063-T5
Plug = A6063-T5
Bar = A6063-T5