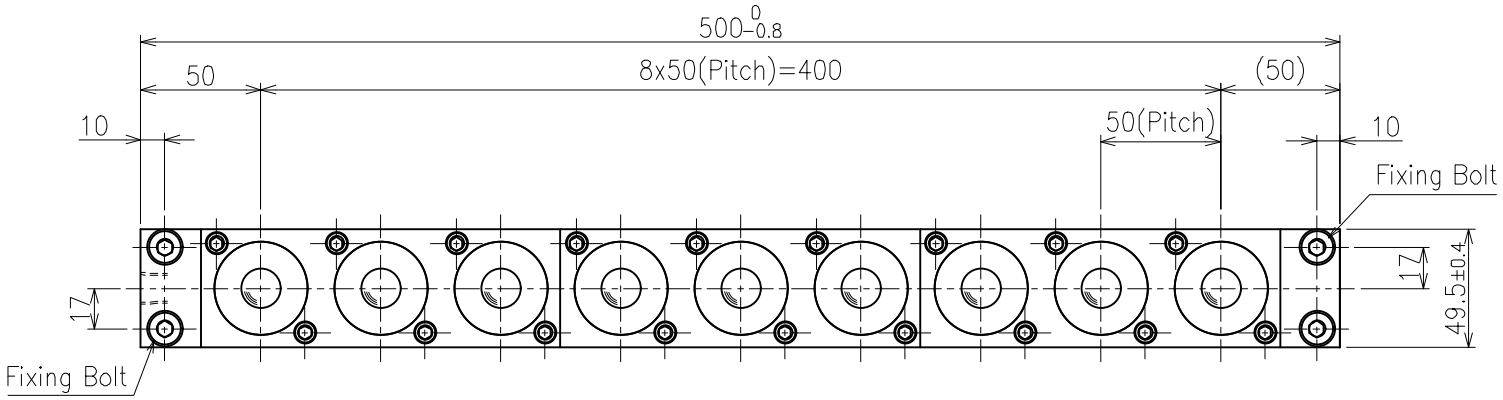

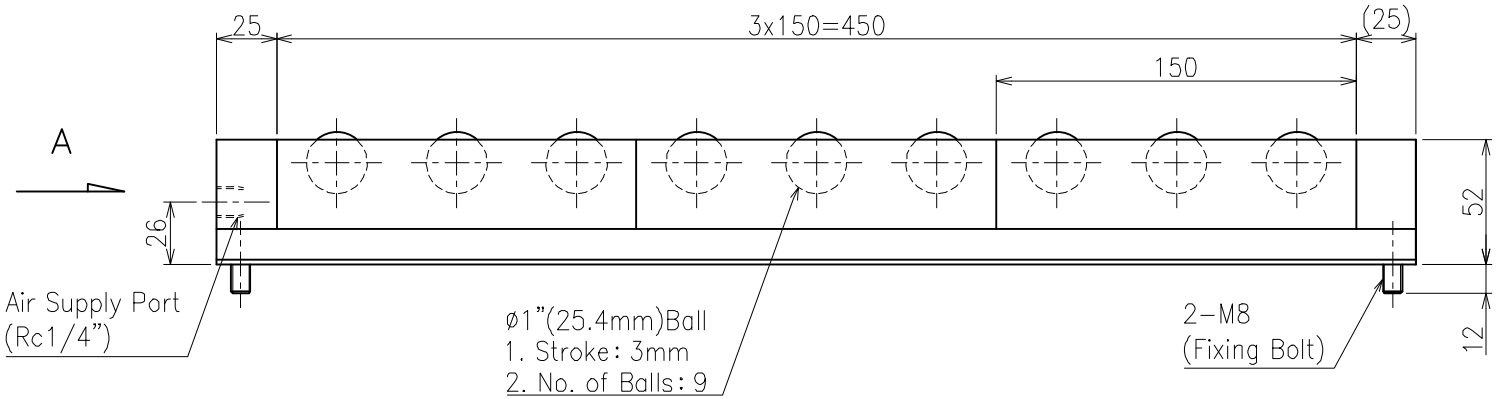

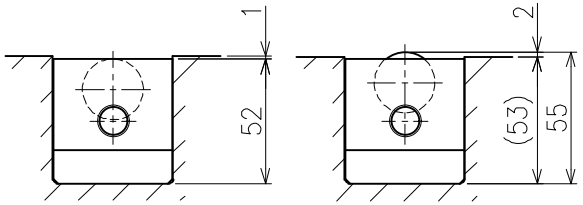

Down Up

View−A

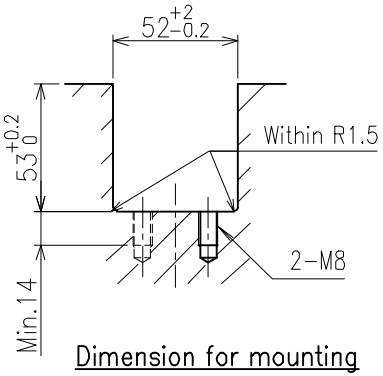

Dimension for mounting

Load capacity			
No. of balls	9		
Supplied air pressure	0.4MPa	0.5MPa	0.6MPa
	{4.08kgf/cm²}	{5.10kgf/cm²}	{6.12kgf/cm²}
Load capacity on each ball	0.46kN	0.60kN	0.73kN
	{47kgf}	{61kgf}	{75kgf}
Load capacity on each unit	4.15kN	5.38kN	6.62kN
	{423kgf}	{549kgf}	{675kgf}

>Description
ISR−50S Type Air Ball Lifter
ISR50S−500−A Type
Unit = mm

>Specification
Product weight = 4.2kg
Withstand pressure = 0.9MPa (9.18kgf/cm²)
Working pressure range
= 0.05~0.6MPa (0.51~6.12kgf/cm²)
Operating tempreture range
= −5~80°C (without freezig air line)
Using fluid = Air and inert gas (no filling up)

>Material
Ball = SUJ2
Plate = SUJ2
Cap = POM
O-ring = NBR
Grease = Normal Grease
Body = A6063−T5
Plug = A6063−T5
Bar = A6063−T5