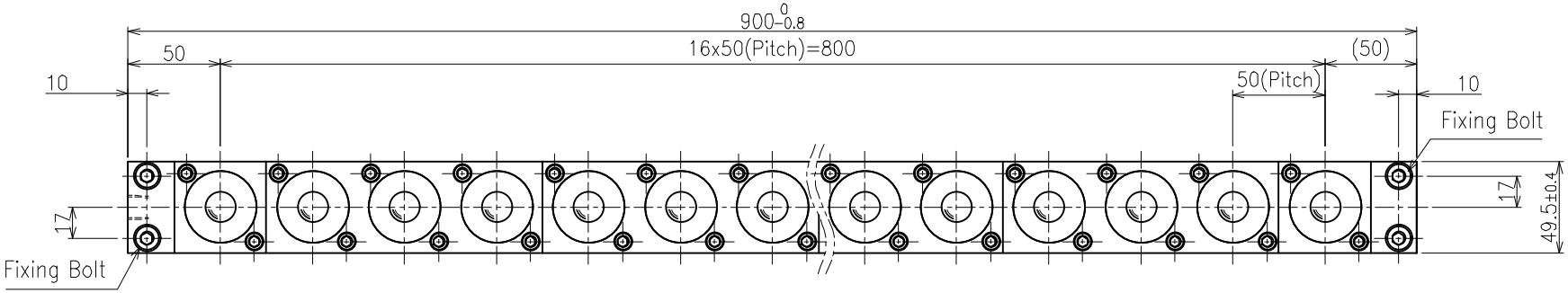

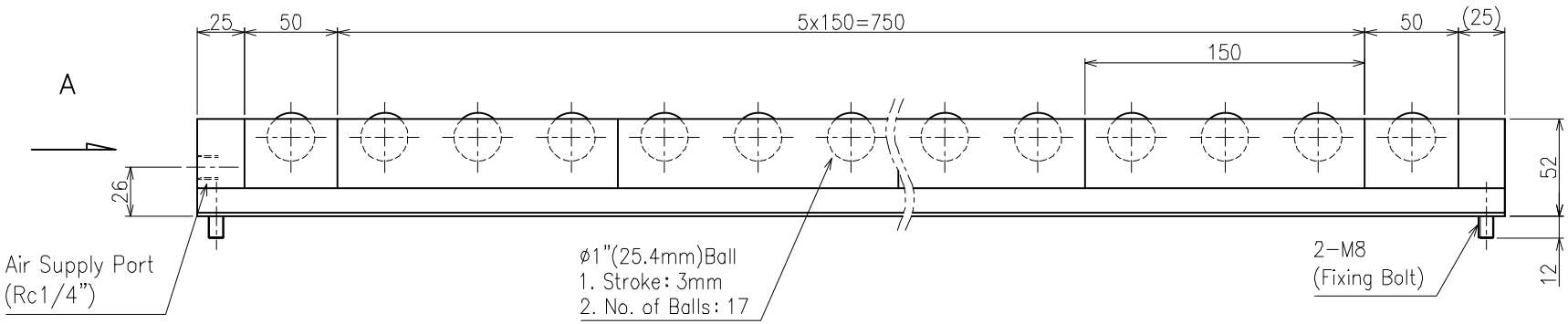

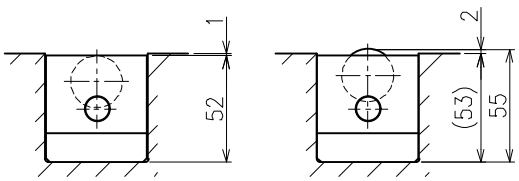

Down Up

View−A

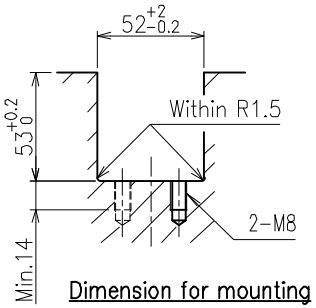

Dimension for mounting

Load capacity			
No. of balls	17		
Supplied air pressure	0.4MPa	0.5MPa	0.6MPa
	{4.08kgf/cm²}	{5.10kgf/cm²}	{6.12kgf/cm²}
Load capacity on each ball	0.98kN	1.24kN	1.51kN
	{100kgf}	{127kgf}	{154kgf}
Load capacity on each unit	16.70kN	21.20kN	25.70kN
	1700kgf	2159kgf	2618kgf

>Description
ISR50D Type Air Ball Lifter
ISR50D−900−A Type
Unit = mm

>Specification
Product weight = 7.2kg
Withstand pressure = 0.9MPa (9.18kgf/cm^2)
Working pressure range
= 0.05~0.6MPa (0.51~6.12kgf/cm^2)
Operating tempreture range
= −5~80°C (without freezig air line)
Using fluid = Air and inert gas (no filling up)

>Material
Ball = SUJ2
Plate = SUJ2
Cap = POM
o-ring = NBR
Grease = Normal Grease
Body = A6063−T5
Plug = A6063−T5
Bar = A6063−T5