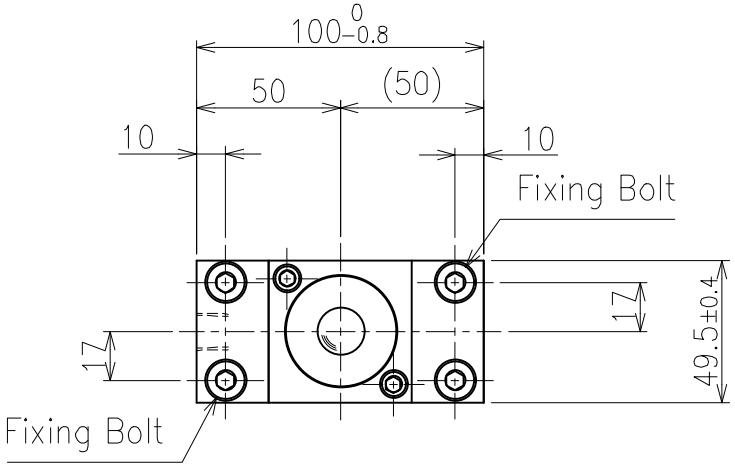


| Load capacity | | | |
|---|---|---|---|
| No. of balls | 1 | | |
| Supplied air pressure | 0.4MPa | 0.5MPa | 0.6MPa |
| | {4.08kgf/cm²} | {5.10kgf/cm²} | {6.12kgf/cm²} |
| Load capacity on each ball | 0.98kN | 1.24kN | 1.51kN |
| | {100kgf} | {127kgf} | {154kgf} |
| Load capacity on each unit | 0.98kN | 1.24kN | 1.51kN |
| | {100kgf} | {127kgf} | {154kgf} |

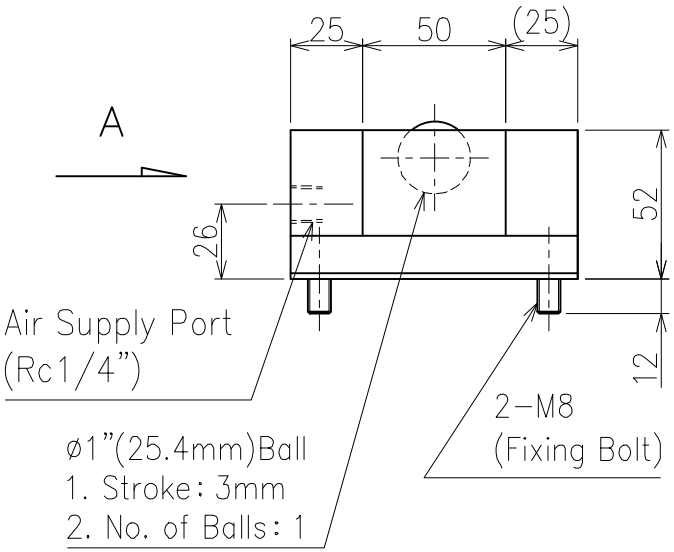


>Description
ISR50D Type Air Ball Lifter
ISR50D−100−A Type
Unit = mm

>Specification
Product weight = 0.8kg
Withstand pressure = 0.9MPa (9.18kgf/cm$^2$)
Working pressure range = 0.05~0.6MPa
(0.51~6.12kgf/cm$^2$)
Operating tempreture range = −5~80°C
(without freezig air line)
Using fluid = Air and inert gas (no filling up)

>Material
Ball = SUJ2
Plate = SUJ2
Cap = POM
O-ring = NBR
Grease = Normal Grease
Body = A6063−T5
Plug = A6063−T5
Bar = A6063−T5

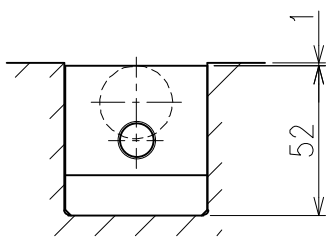


Down

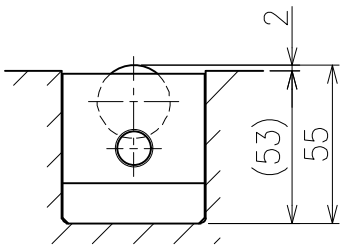


Up

View−A

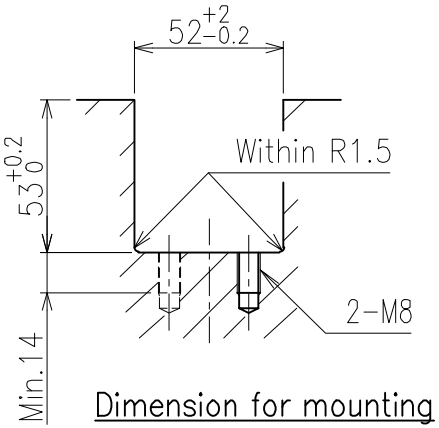


Dimension for mounting