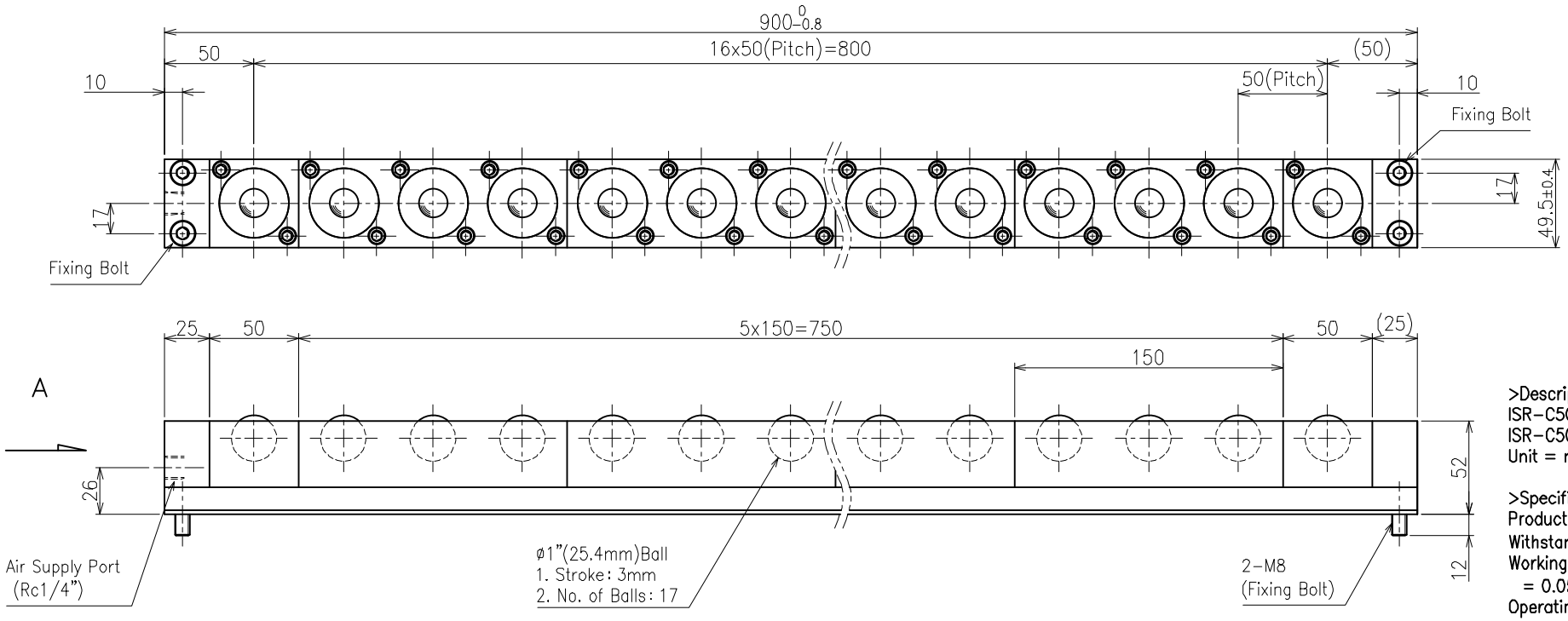

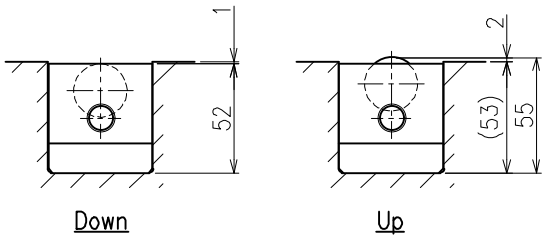

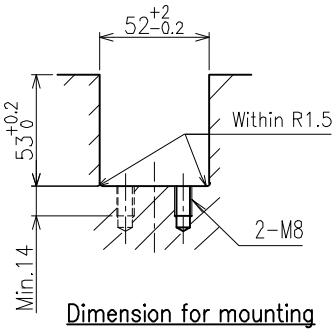

Load capacity			
No. of balls	17		
Supplied air pressure	0.4MPa	0.5MPa	0.6MPa
	{4.08kgf/cm²}	{5.10kgf/cm²}	{6.12kgf/cm²}
Load capacity on each ball	0.46kN	0.60kN	0.73kN
	{47kgf}	{61kgf}	{75kgf}
Load capacity on each unit	7.83kN	10.20kN	12.50kN
	{799kgf}	{1037kgf}	{1275kgf}

>Description
ISR-C50S Type Air Ball Lifter
ISR-C50S-900-A Type
Unit = mm

>Specification
Product weight = 7.6kg
Withstand pressure = 0.9MPa (9.18kgf/cm²)
Working pressure range
= 0.05~0.6MPa (0.51~6.12kgf/cm²)
Operating tempreture range
= -5~80°C (without freezig air line)
Using fluid = Air and inert gas (no filling up)

>Material
Ball = SUS440C
Plate = SUS440C
Cap = SUS304
O-ring = Viton(R)
Grease = Clean Grease
Body = Aluminum + Electroless Nickel-Plating
Plug = Aluminum + Electroless Nickel-Plating
Bar = Aluminum + Electroless Nickel-Plating