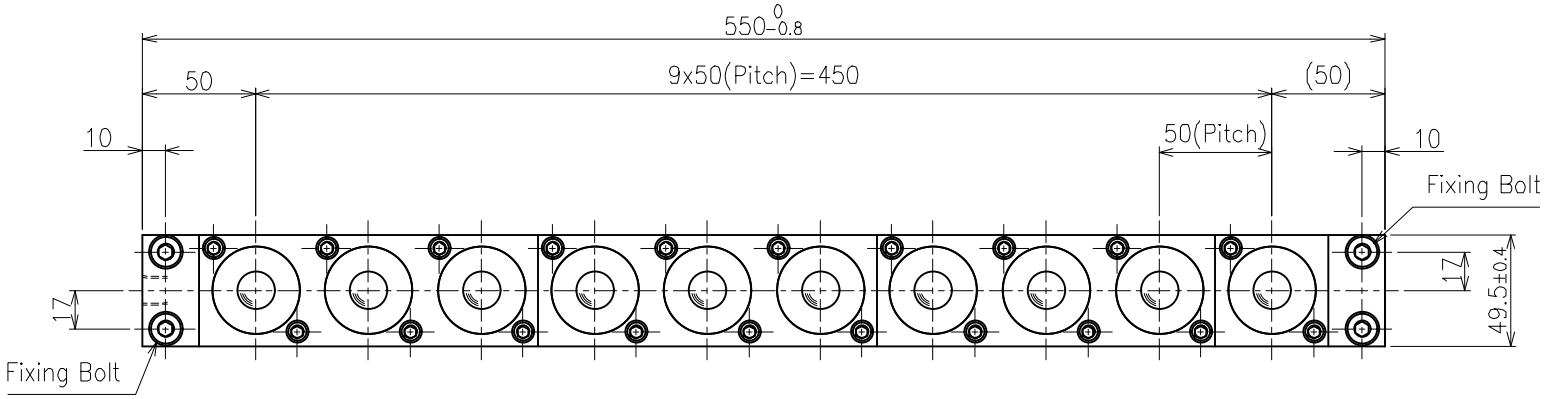

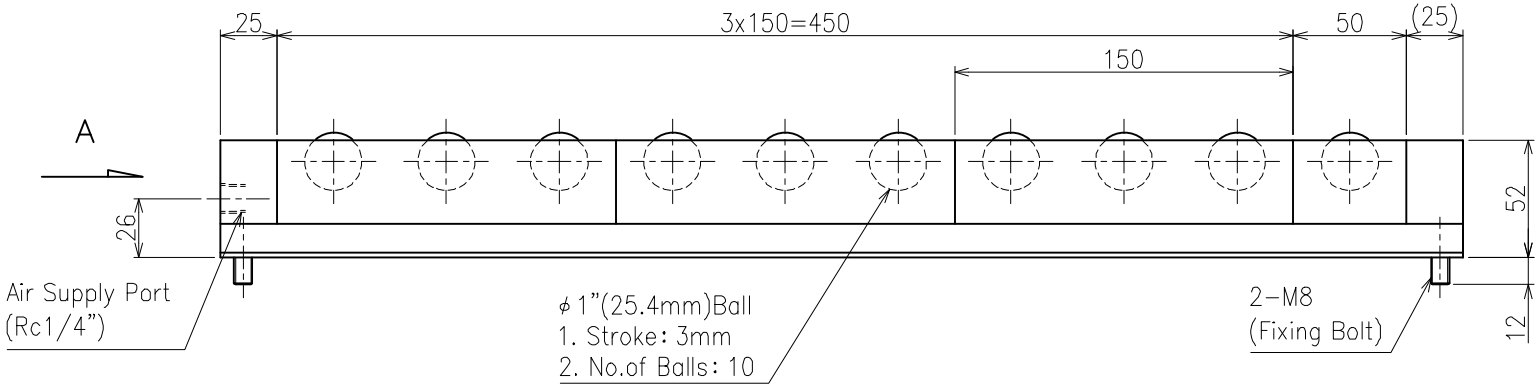

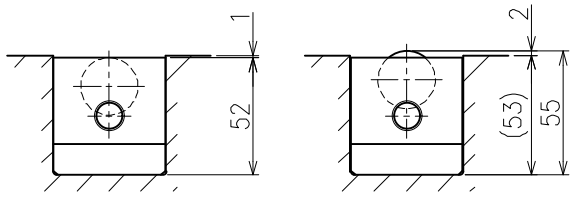

Down

Up

View-A

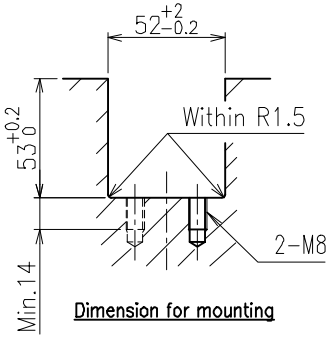

Dimension for mounting

Load capacity			
No. of balls	10		
Supplied air pressure	0.4MPa	0.5MPa	0.6MPa
	{4.08kgf/cm²}	{5.10kgf/cm²}	{6.12kgf/cm²}
Load capacity on each ball	0.98kN	1.24kN	1.51kN
	{100kgf}	{127kgf}	{154kgf}
Load capacity on each unit	9.80kN	12.40kN	15.10kN
	{1000kgf}	{1270kgf}	{1540kgf}

>Description
ISR-C50D Type Air Ball Lifter
ISR-C50D-550-A Type
Unit = mm

>Specification
Product weight = 4.4kg
Withstand pressure = 0.9MPa (9.18kgf/cm²)
Working pressure range
= 0.05~0.6MPa (0.51~6.12kgf/cm²)
Operating tempreture range
= -5~80°C (without freezig air line)
Using fluid = Air and inert gas (no filling up)

>Material
Ball = SUS44C
Plate = SUS440C
Cap = SUS304
O-ring = Viton
Grease = Clean Grease
Body = A6063-T5
+Electroless Nickel plating
Plug = A6063-T5
+Electroless Nickel plating
Bar = SGD400-D
+Electroless Nickel plating