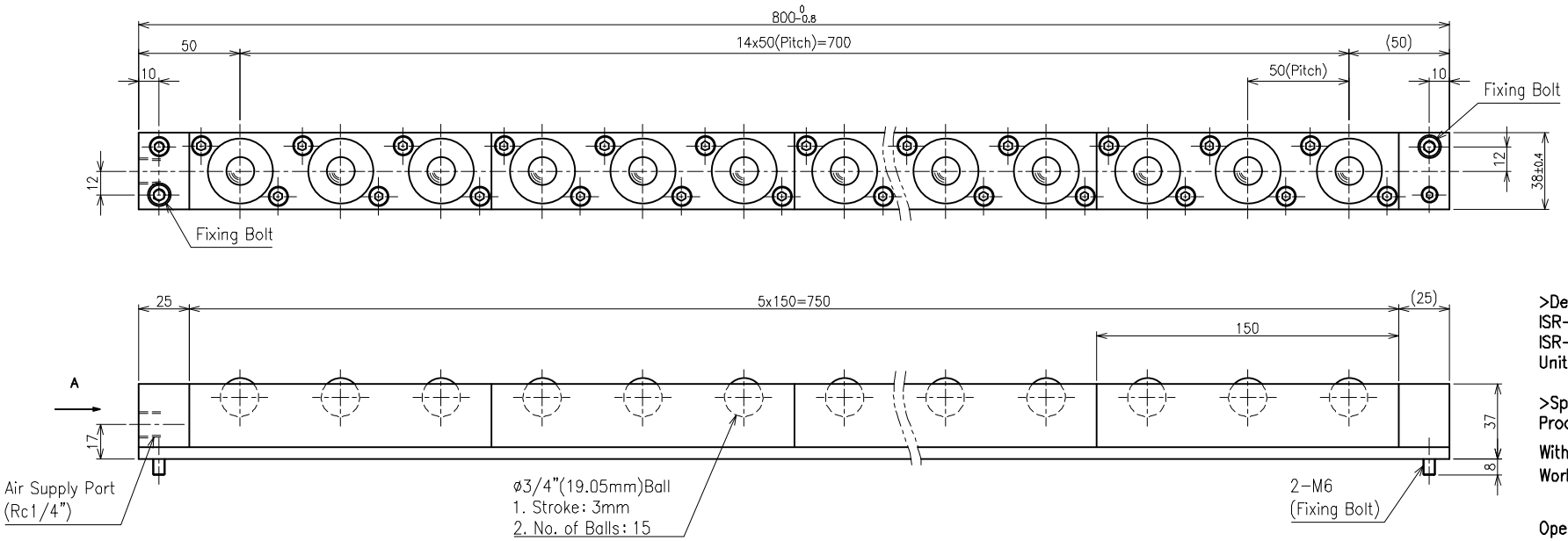

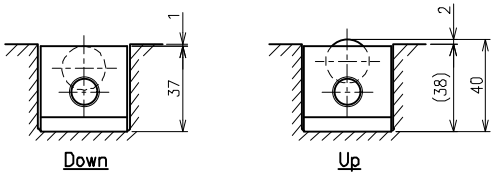

View-A

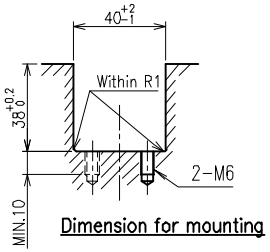

Dimension for mounting

Load capacity			
No. of balls	15		
Supplied air pressure	0.4MPa	0.5MPa	0.6MPa
	{4.08kgf/cm²}	{5.10kgf/cm²}	{6.12kgf/cm²}
Load capacity on each ball	0.32kN	0.41kN	0.51kN
	{33kgf}	{42kgf}	{52kgf}
Load capacity on each unit	4.85kN	6.17kN	7.64kN
	{495kgf}	{630kgf}	{780kgf}

>Description
ISR-C38 Type Air Ball Lifter
ISR-C38-800-A Type
Unit = mm

>Specification
Product weight = 4.6kg
Withstand pressure = 0.9MPa (9.18kgf/cm^2)
Working pressure range = 0.05~0.6MPa
(0.51~6.12kgf/cm^2)
Operating tempreture range = -5~80°C
(without freezig air line)
Using fluid = Air and inert gas (no filling up)

>Material
Ball = SUS440C
Plate = SUS440C
Cap = SUS304
o-ring = Viton
Grease = Clean Grease
Body = A6063-T5
+Electroless Nickel plating
Plug = A6063-T5
+Electroless Nickel plating
Bar = SGD400-D
+Electroless Nickel plating