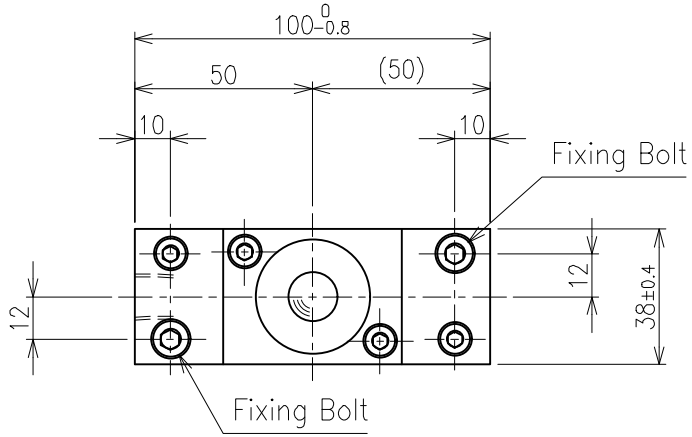

Load capacity			
No. of balls	1		
Supplied air pressure	0.4MPa	0.5MPa	0.6MPa
	{4.08kgf/cm²}	{5.10kgf/cm²}	{6.12kgf/cm²}
Load capacity on each ball	0.32kN	0.41kN	0.51kN
	{33kgf}	{42kgf}	{52kgf}
Load capacity on each unit	0.32kN	0.41kN	0.51kN
	{33kgf}	{42kgf}	{52kgf}

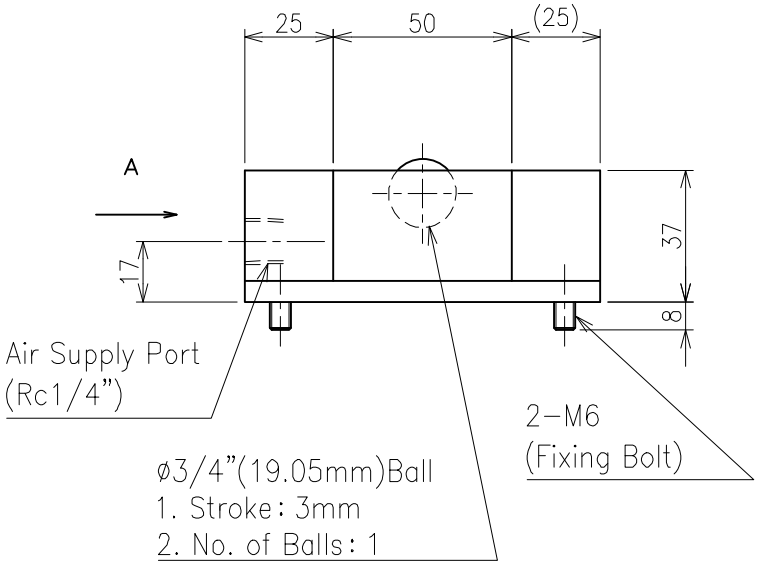

>Description
ISR−C38 Type Air Ball Lifter
ISR−C38−100−A Type
Unit = mm

>Specification
Product weight = 0.6kg
Withstand pressure = 0.9MPa (9.18kgf/cm^2)
Working pressure range = 0.05~0.6MPa
(0.51~6.12kgf/cm^2)
Operating tempreture range = −5~80°C
(without freezig air line)
Using fluid = Air and inert gas (no filling up)

>Material
Ball = SUS440C
Plate = SUS440C
Cap = SUS304
O-ring = Viton
Grease = Clean Grease
Body = A6063−T5
+Electroless Nickel plating
Plug = A6063−T5
+Electroless Nickel plating
Bar = SGD400−D
+Electroless Nickel plating

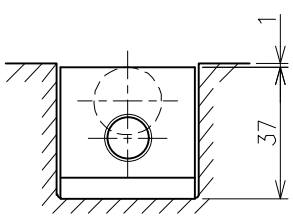

Down

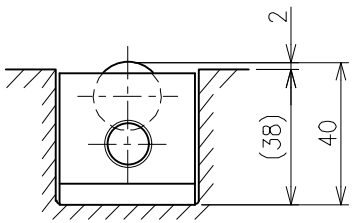

Up

View−A

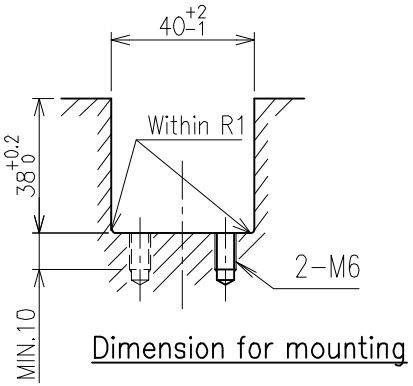

Dimension for mounting