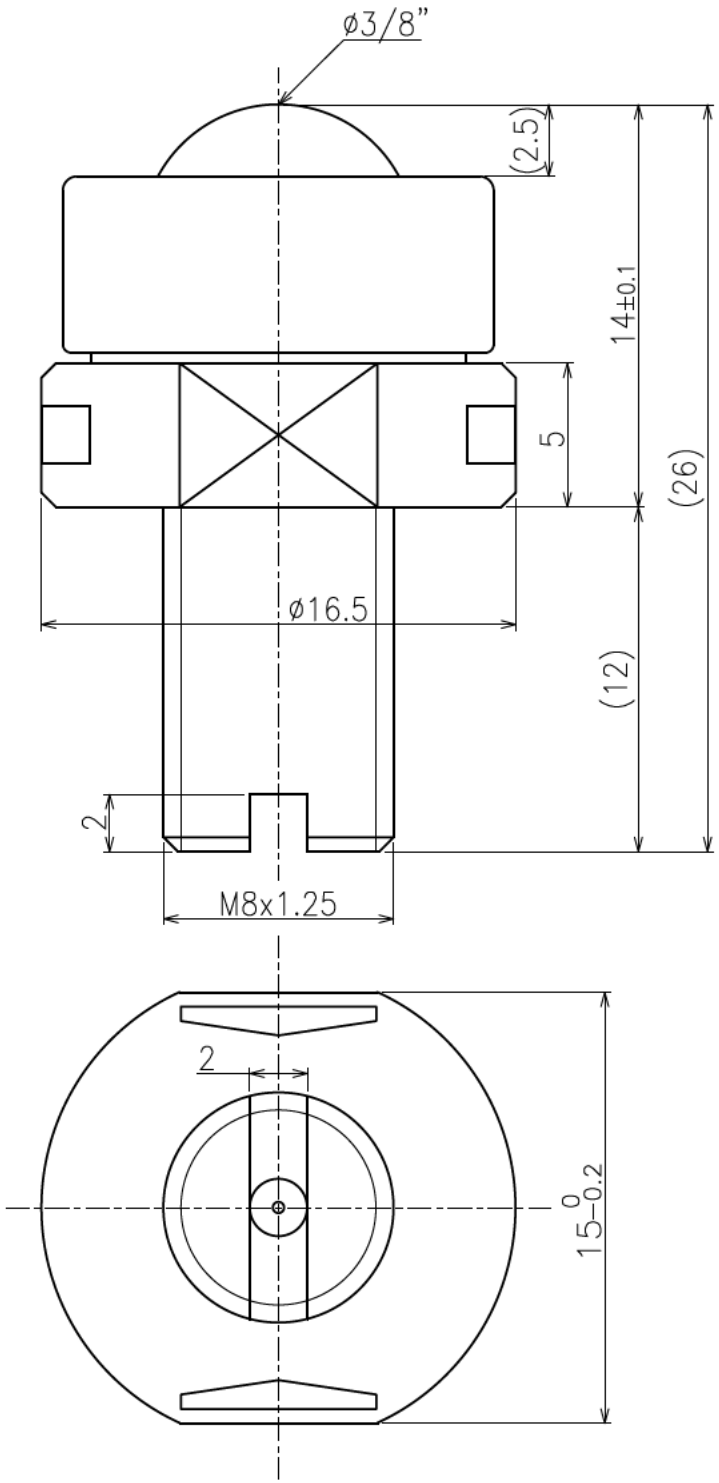

>Description
ISCS Type Ball Transfer
ISCS-10FS-J Type
Unit = mm

>Specification
Large Ball Size =ø3/8"(9.53mm)

Body = POM(NATURAL)
Main Ball = 3F
Small Ball = Stainless
Cap = POM(NATURAL)