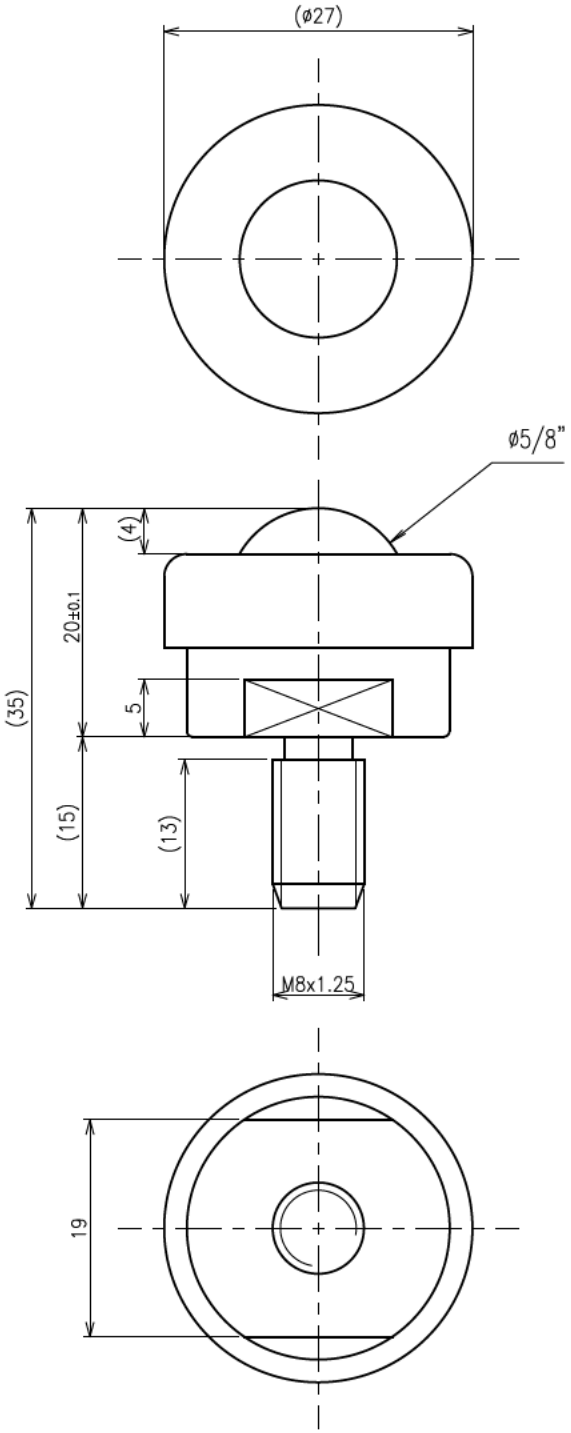

>Description
ISC−16 Type Ball Transfer
ISC−16P2S−SJ
Unit = mm

>Specification
Large Ball Size =ϕ5/8"(15.88mm)

Body = Stainless
Main Ball = ESD PEEK
Small Ball = Stainless
Cap = POM(NATURAL)