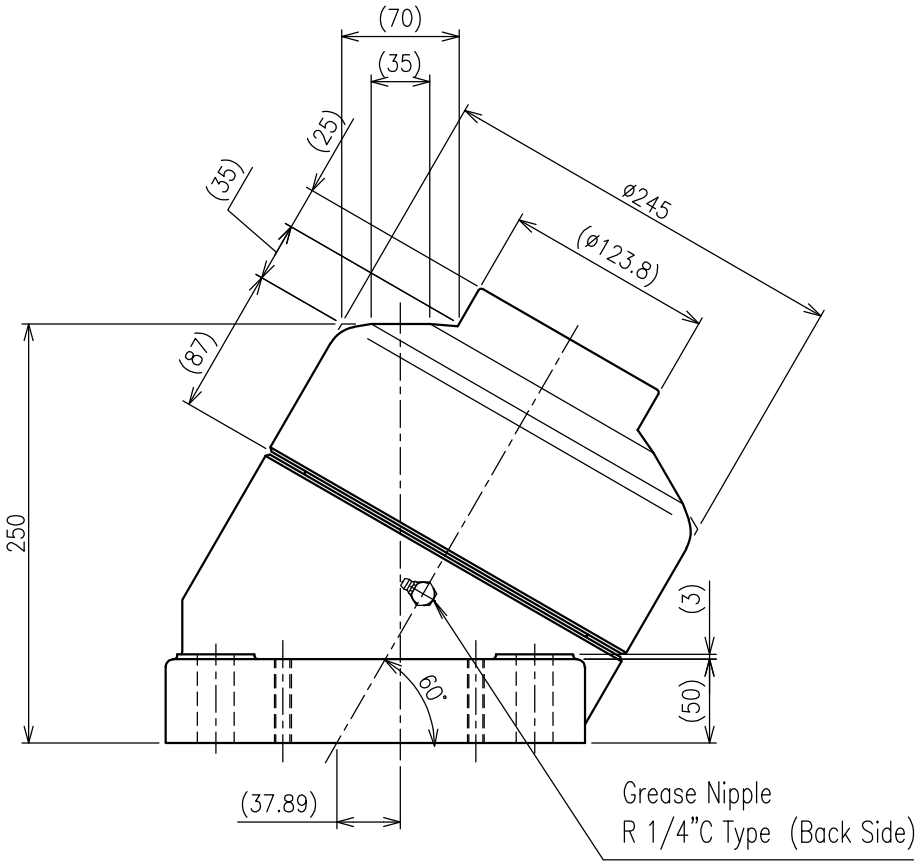

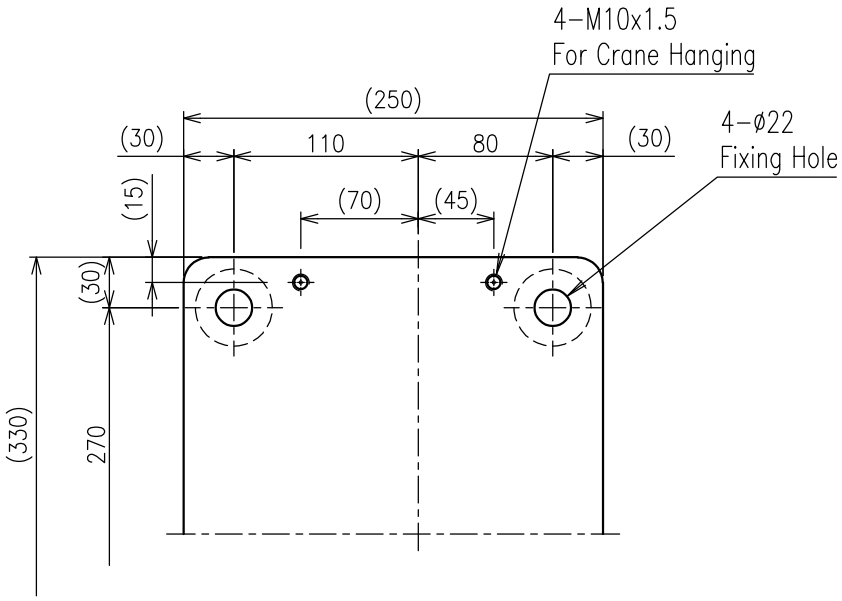

>Description
SW Special Wheel
SW-250-K Type
Unit = mm

>Specification
Product Weight = 81.8kg
Load Capacity = 5000kgf

Head = S45C (Hardend)
Body = FC250