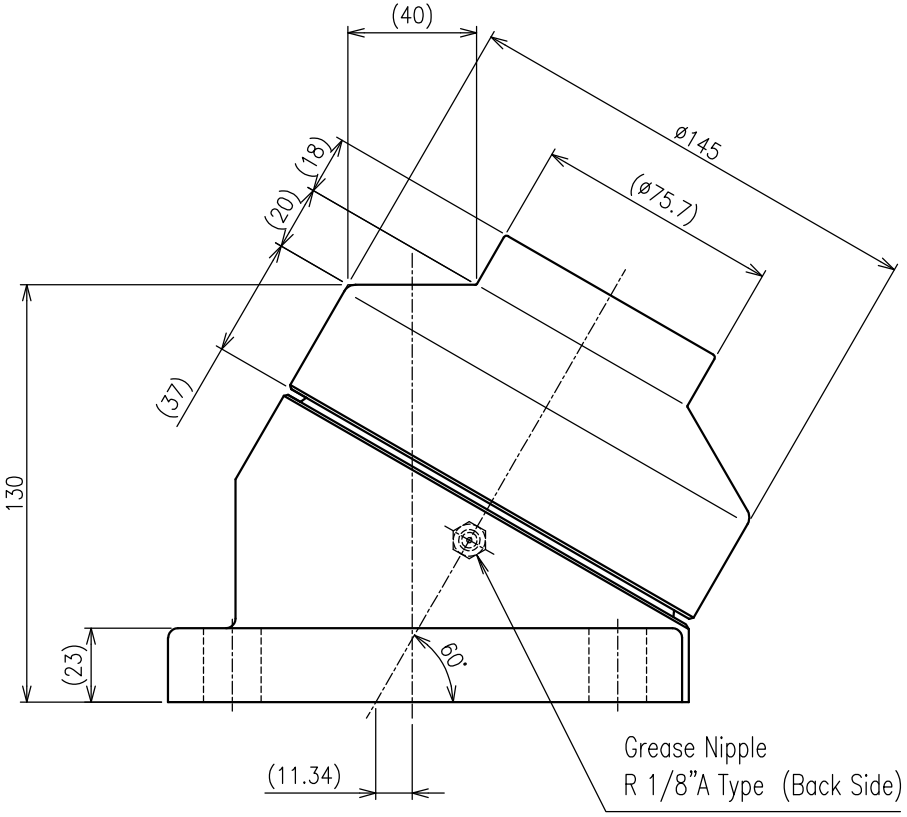

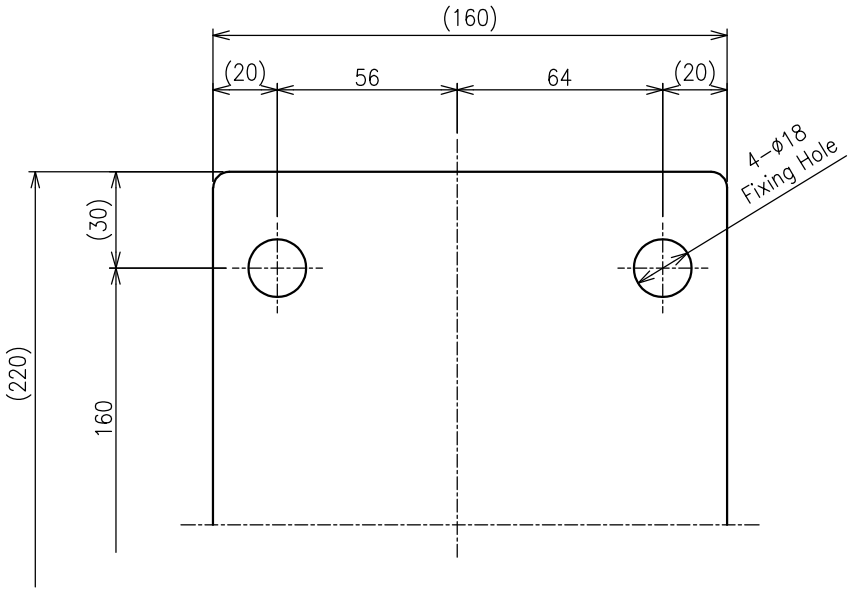

>Description
SW Special Wheel
SW-130-K Type
Unit = mm

>Specification
Product Weight = 13.7kg
Load Capacity = 1200kgf

Head = S45C
Body = FC250